Voltage controlled operational amplifier

BA6110FS

The BA6110FS is a low-noise, low-offset programmable operational amplifier. Offering superb linearity over a broad range, this IC is designed so that the forward direction conductivity (g_m) can be changed, making it ideal for applications such as voltage control amplifiers (VCA), voltage control filters (VCF) and voltage control oscillators (VCO).
Distortion reduction circuitry improves the signal-to-noise ratio by a significant 10dB at a distortion rate of 0.5% in comparison with products not equipped with this feature. When used as a voltage control amplifier (VCA), a high S / N ratio of 86dB can be achieved at a distortion rate of 0.5%.
The open loop gain is determined by the control current and an attached gain determining resistance R_L, enabling a wide range of settings.
In addition, a built-in low-impedance output buffer circuit reduces the number of attachments.

●Applications

Electronic volume controls
Voltage-controlled impedances
Voltage-controlled amplifiers (VCA)
Voltage-controlled filters (VCF)
Voltage-controlled oscillators (VCO)
Multipliers
Sample holds
Schmitt triggers

●Features

1) Low distortion rate.
   (built-in distortion reduction bias diode)
2) Low noise.
3) Low offset voltage. (V_{IO} = 3m V_{Max}).
4) Built-in output buffer.
5) Variable g_m with superb linearity across three decade fields.

●Block diagram

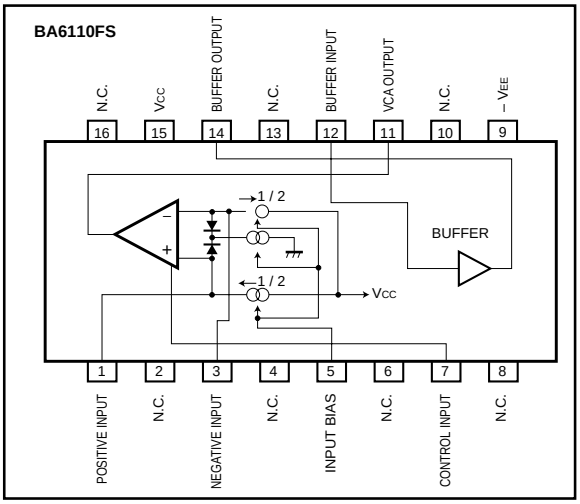

●Internal circuit configuration

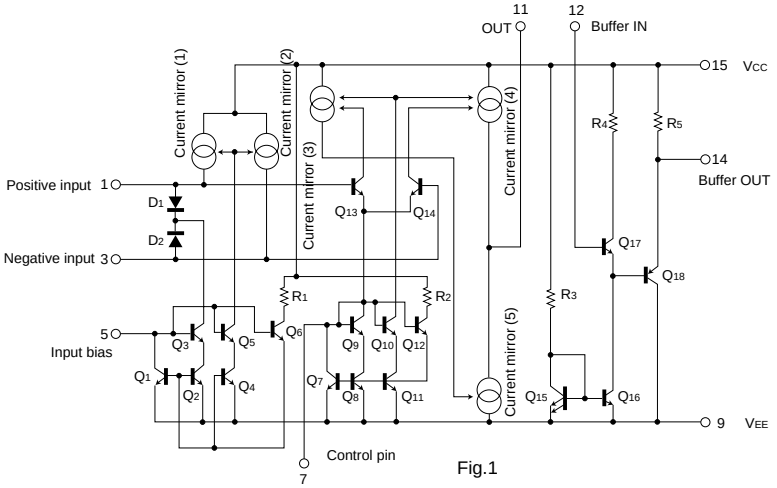

Fig.1

●Absolute maximum ratings (Ta = 25°C)

Parameter	Symbol	Limits	Unit
Power supply voltage	V_{CC}	34	V
Power dissipation	Pd	300*1	mW
Operating temperature	Topr	– 20 ~ + 70	˚C
Storage temperature	Tstg	– 55 ~ + 125	˚C
Maximum control current	$I_{C\ Max.}$	500	μA

*1 Reduced by 3mW for each increase in Ta of 1˚C each 25˚C.

●Electrical characteristics (unless otherwise noted, Ta = 25°C, V_{CC} = 15V, V_{EE} = – 15V)

Parameter	Symbol	Min.	Typ.	Max.	Unit	Conditions	Measurement circuit
Quiescent current	I_Q	0.9	3.0	6.0	mA	$I_{CONTROL}$ = 0μA	Fig.2
Pin 7 bias current	I_{7PIN}	—	0.8	5	μA	—	Fig.2
Distortion	THD	—	0.2	1	%	$I_{CONTROL}$ = 200μA, V_I = 5mVrms	Fig.2
Forward transmission conductance	g_m	4800	8000	12000	μs	$I_{CONTROL}$ = 500μA	Fig.2
Pin 6 maximum output voltage	| V_{OM6} |	12	14	—	V	$I_{CONTROL}$ = 500μA	Fig.2
Pin 8 maximum output voltage	| V_{OM8} |	9	11	—	V	R_L = 47kΩ	Fig.2
Pin 6 maximum output current	| I_{OM6} |	300	500	650	μA	$I_{CONTROL}$ = 500μA	Fig.2
Residual noise 1	VN_1	—	– 94	– 90	dBm	$I_{CONTROL}$ = 0μA, BPF (30 ~ 320kHz, 3dB, 6dB / OCT)	Fig.2
Residual noise 2	VN_2	—	– 74	– 66	dBm	$I_{CONTROL}$ = 200μA, BPF (30 ~ 20kHz, 3dB, 6dB / OCT)	Fig.2
Discontinuous noise	VNP_2	—	10.5	11.5	dB	$I_{CONTROL}$ = 200μA, BPF (30 ~ 20kHz, 3dB, 6dB / OCT)	Fig.2
Leakage level	L (Leak)	—	– 94	– 75	dBm	$I_{CONTROL}$ = 0μA, V_{IN} = – 30dBm f_{IN} = 20kHz	Fig.2

●**Measurement circuit**

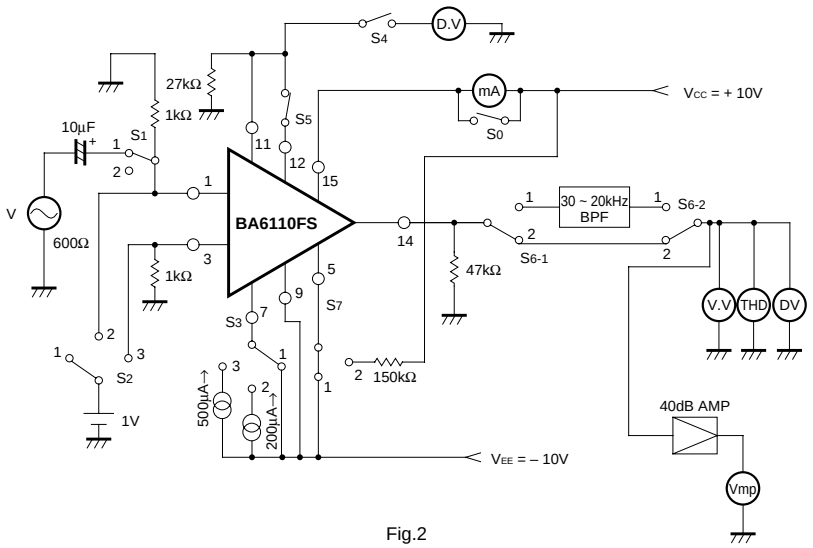

Fig.2

●**Circuit discription**

The BA6110FS is configured of an operational amplifier which can control the forward propagation conductance (g_m) using the control current, an input bias-compensating diode used to eliminate distortion created by the amplifier's differential input, a bias setter, and an output buffer.

In the operational amplifier, Pin 1 is the positive input and Pin 3 is the negative input. Pin 7 is the control pin which determines the differential current. Pin 11 is the output pin which determines the open loop gain using the external resistor and the control current.

This section describes the circuit operation of this operational amplifier.

Transistors Q_{13} and Q_{14} form the differential input for the operational amplifier, while transistors Q_7 to Q_{12} are composed of the current mirror circuits. The current mirror absorbs current from the differential input common emitter which is equal to the control current flowing into the Pin 7 control pin. If the differential input V_{IN} = 0 at this point, then 1 / 2 Ic is supplied to the Q_{13} and Q_{14} collectors and the other half passes through the current mirrors (3) and (4). The output of current mirror (3) which is the differential active load is inverted by current mirror (5), and is balanced with the output of current mirror (4), also an active load.

If the differential input changes, the current balance changes. The output current is on Pin 11. An output voltage can be generated using an external resistance.

For the open loop gain of this operational amplifier, if the Pin 7 control current is $I_{CONTROL}$ and the Pin 11 external resistance is R_O, then:

$$Av = g_m \cdot R_O = \frac{I_{CONTROL} \times R_O}{2\,\frac{KT}{q}}$$

To eliminate the distortion created by the differential input, the input bias diode and its bias circuit consist of the following: bias diodes D_1 and D_2, current mirrors (1) and (2), and the Pin 5 bias pin current mirror that consists of the transistors Q_1 to Q_6 and the resistance R1.

This circuit eliminates the distortion that occurs as a result of using the differential input open loop.

In the buffer circuit, Pin 12 is the buffer input and Pin 14 is the buffer output.

In the buffer circuit, the emitter follower consists of the active load of the NPN transistor, Q_{17}, and its active load, Q_{16}. The V_F difference created by the emitter follower is eliminated by the emitter follower which consists of the PNP transistor Q_{18} and resistor R_5. Also, the gain is determined by the ratio of the signal source resistance R_{IN} and the diode impedance.

●Attached components

(1) Positive input (Pin 1)

This is the differential positive input pin. To minimize the distortion due to the diode bias, an input resistor is connected in series with the signal source. By increasing the input resistance, distortion is minimized.

However, the degree of improvement for resistances greater than 10kΩ is about the same. An input resistance of 1kΩ to 20kΩ is recommended.

(2) Negative input (Pin 3)

This is the differential negative input pin. It is grounded with roughly the same resistance value as that of the positive input pin. The offset adjustment is also connected to this pin. Make sure a sufficiently high resistance is used, so as not to disturb the balance of the input resistance (see Figure 3).

(3) Input bias diode (Pin 5)

The input bias diode current (I_D) is determined by this pin. The IC input impedance when the diode is biased, if the diode bias current is I_D, is expressed as follows:

$$R_d = \frac{26}{I_D\ (mA)}\ (\Omega)$$

(4) Control (Pin 7)

This pin controls the differential current. By changing the current which flows into this pin, the gain of the differential amplifier can be changed.

(5) Output (Pin 11)

The differential amplifier gain (A_V) is determined by the resistor R_O connected between the output terminal and the Pin 7 control terminal, as follows:

$$A_V = g_m \cdot R_O = \frac{I_{CONTROL}\ (mA)}{52\ (mV)} \times R_O$$

Make sure the resistor is selected based on the desired maximum output and gain.

(6) Buffer input (Pin 12)

The buffer input consists of the PNP and NPN emitter follower. The bias current is normally about 0.8μA. Consequently, when used within a small region of control current, we recommend using the high input impedance FET buffer.

(7) Buffer output resistance (Pin 14)

An 11kΩ resistor is connected between V_{CC} and the output within the IC. When adding an external resistance between the GND and the output, make sure the resistor R_L = 33kΩ.

●Application example

(1) Fig.3 shows a voltage-controlled amplifier (AM modulation) as an example of an application of the BA6110FS.

By changing the $I_{CONTROL}$ current on Pin 7, the differential gain can be changed. The gain (A_V), if the resistance of Pin 11 is R_O, is determined by the following equation:

$$A_V = g_m \cdot R_O = \frac{I_{CONTROL}\ (mA)}{52\ (mV)} \times R_O$$

Good linearity can be achieved when controlling over three decades.

By connecting Pin 5 to the V_{CC} by way of a resistor, the input is biased at the diode and distortion is reduced.

The gain in this case is given by the diode impedance Rd and the ratio of the input resistance R_{IN}, as shown in the following:

$$A_V = g_m \cdot R_O \times \frac{R_d}{R_d \times R_{IN}}$$

The diode impedance R_d = (26 / I_D (mA)) Ω, so that the Pin 5 bias current I_D = (V_{CC} - 1V) / R (Pin 5). The graph in Fig. 6 shows the control current in relation to the open loop gain at the diode bias. In the same way, Fig.7 shows the control current in relation to the THD = 0.5% output at the bias point.

Fig. 8 shows a graph of the control current in relation to the open gain with no diode bias.

Fig. 9 shows a graph of the control current in relation to the SN ratio.

Fig. 10 shows a graph of the diode bias current in relation to the SN ratio.

Fig. 11 shows a graph of the power supply voltage characteristics.

(2) Fig. 4 shows a low pass filter as an example of an application of the BA6110FS.

The cutoff frequency f_O can be changed by changing the Pin 7 control current.

The cutoff frequency f_O is expressed as:

$$f_O = \frac{R_A \cdot g_m}{(R + R_A)\ 2\pi C}$$

This is attenuated by -6dB / OCT.

Fig. 12 shows a graph of the $I_{CONTROL}$ in relation to the output characteristics.

(3) Fig. 5 shows a voltage-controlled secondary low passfilter as an example of an application of the BA6110FS.

The cutoff frequency f_O can be changed by changing thePin 7 control current.

$$f_O = \frac{R_A \cdot g_m}{(R + R_A) \cdot 2\pi C}$$

This is attenuated by - 12dB / OCT.

Fig. 13 shows a graph of the $I_{CONTROL}$ output characteristic.

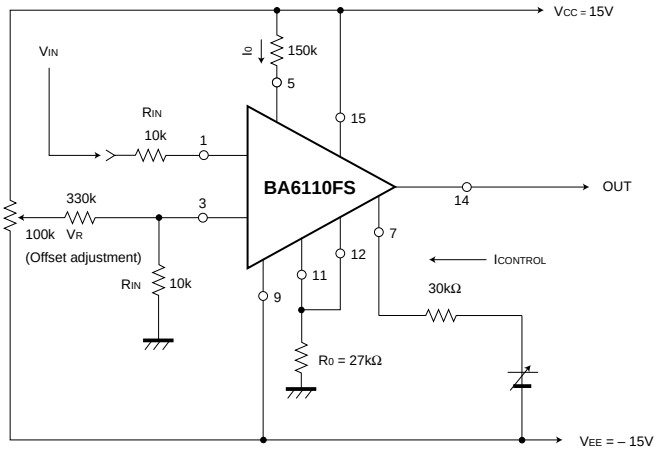

Fig.3 Voltage-controlled amplifier (electronic volume control)

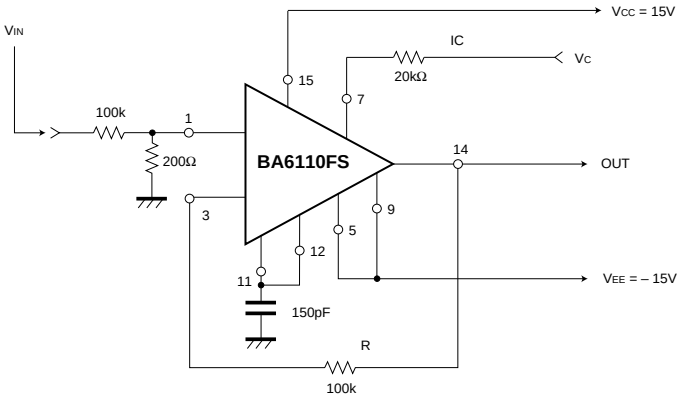

Fig.4 Voltage control low pass filter

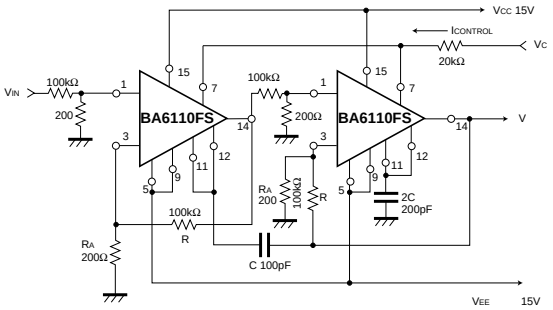

Fig.5 Voltage-controlled secondary low pass filter

●Electrical characteristic curves

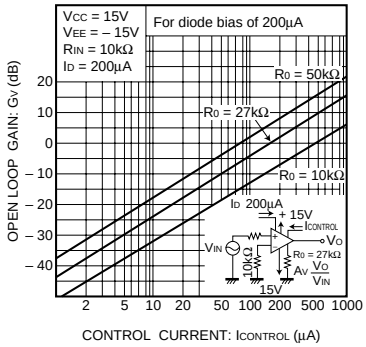

Fig.6 Open loop gain control current characteristics

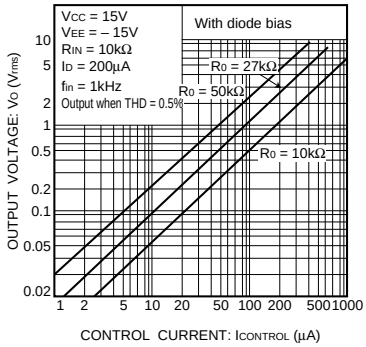

Fig.7 THD 0.5% output control current characteristics

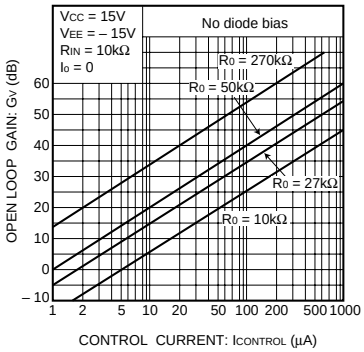

Fig.8 Open loop gain control current characteristics

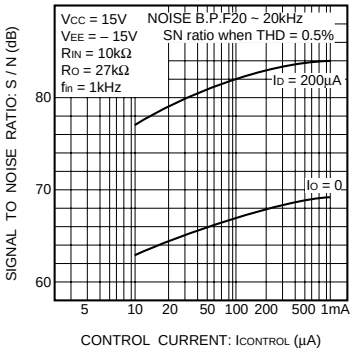

Fig.9 SN ratio vs. control current

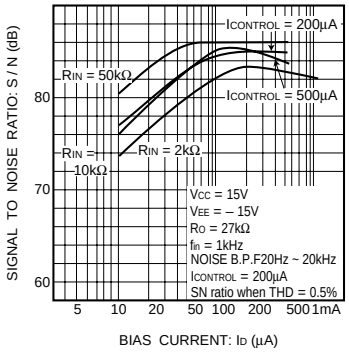

Fig.10 SN ratio vs. diode bias current

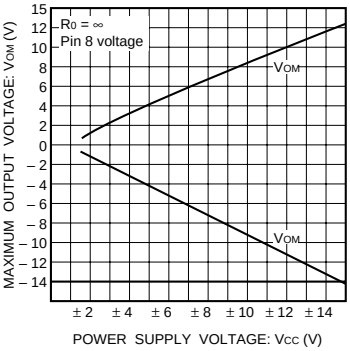

Fig.11 Maximum output voltage vs. power supply voltage

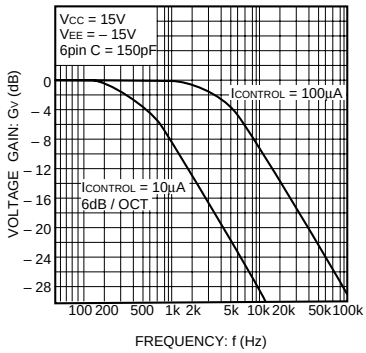

Fig.12 Low pass filter characteristics

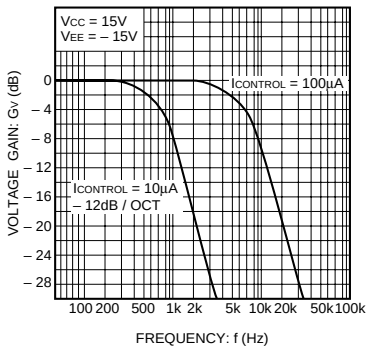

Fig.13 Secondary low pass filter characteristics

●**External dimensions** (Units : mm)

BA6110FS

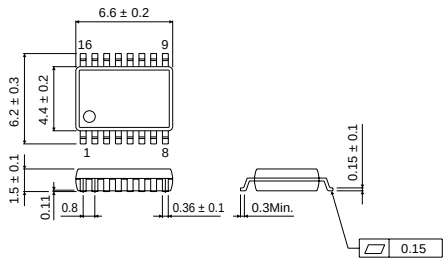

SSOP-A16