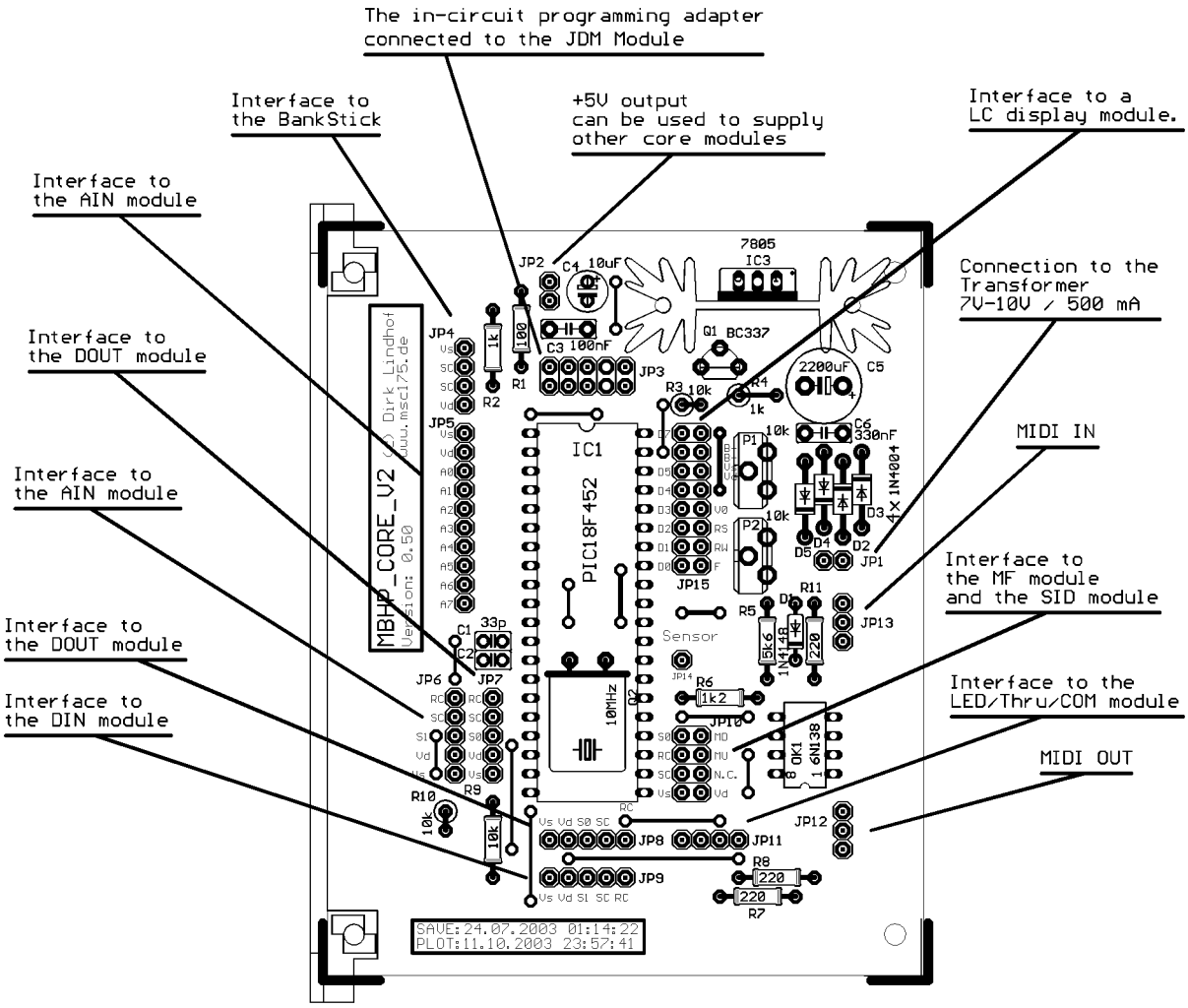
The in-circuit programming adapter connected to the JDM Module
Interface to the BankStick
+5V output can be used to supply other core modules
Interface to a LC display module.
Interface to the AIN module
Connection to the Transformer 7V-10V / 500 mA
Interface to the DOUT module
MIDI IN
Interface to the AIN module
Interface to the MF module and the SID module
Interface to the DOUT module
Interface to the LED/Thru/COM module
Interface to the DIN module
MIDI OUT
MBHP_CORE_V2
(c) Dirk Lindhof
www.msc175.de
Version: 0.50
IC1
PIC18F452
7805
IC3
Q1 BC337
2200uF
C5
C4 10uF
C3 100nF
C6 330nF
4X 1N4004
Sensor
10MHz
6N138
SAVE:24.07.2003 01:14:22
PLOT:11.10.2003 23:57:41

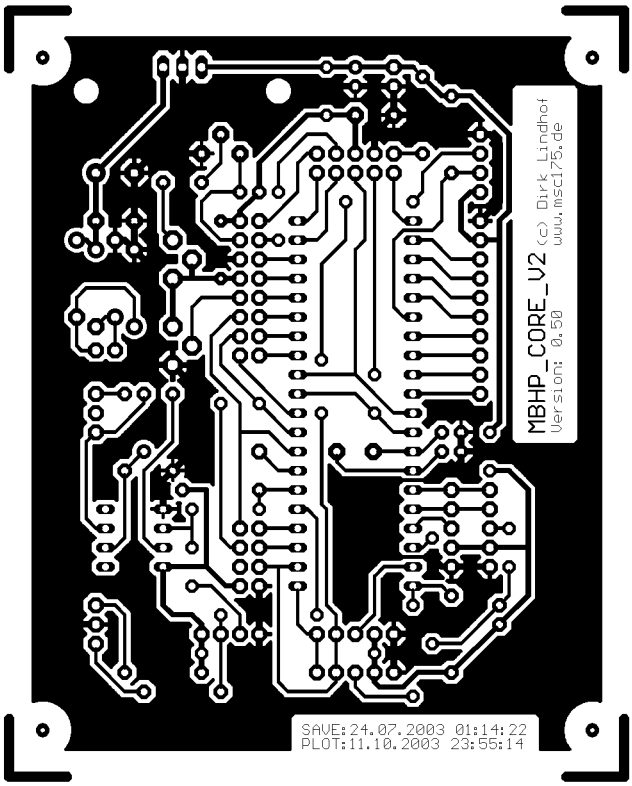
MBHP_CORE_V2
(c) Dirk Lindhof
www.msc175.de
Version: 0.50
SAVE:24.07.2003 01:14:22
PLOT:11.10.2003 23:55:14